STAVKIRKE – WOODEN NORWEGIAN CHURCHES – THE KEY CONSTRUCTION PRINCIPLES

Architecture and wooden structures are encountered throughout almost all locations wherever people found decent enough conditions for settlement; this being related mainly to the availability of wood as the basic construction material. The oldest preserved relics of wooden construction date back to the Neolithic period, mainly made from the tree branches, with the walls fashioned from tightly braided brushwood plastered with clay. A mature skeletal structure is dated to the end of the Neolithic period and Bronze and early Iron Age (Fig. 1). In the latter period, the construction characterised by massive walls, made of solid timber, with vertically or horizontally stacked up logs already became quite popular. In the Far East, wooden constructions were developed at the beginning of the AD era, i.e. the earliest preserved Japanese wooden temples date back to the 5th-7th centuries[1].

The oldest European wooden relic, part of whose walls is dated back to the AD 845[2], is a church in Greenstead (England, Essex – north-east of London). The walls are made up of vertical staves, joined together with the tongue and groove joints, firmly embedded in the foundations, and then tighly clasped (with the aid of plugs and pegs) with a pile cap at the top. This type of construction is also known as a palisade (Fig. 2-3). rchaeological research reveals that in the 5th and 6th centuries, wooden churches were built *en masse* – both in the west and in the east of Europe[3]. Following the initial period characterised by constructing solid walls (of a palisade or coronary type), much lighter constructions started to prevail, also much more economical in the use of top quality timber, already pretty hard to come by, and at the time very much in demand for the construction of various sailing vessels and warships.

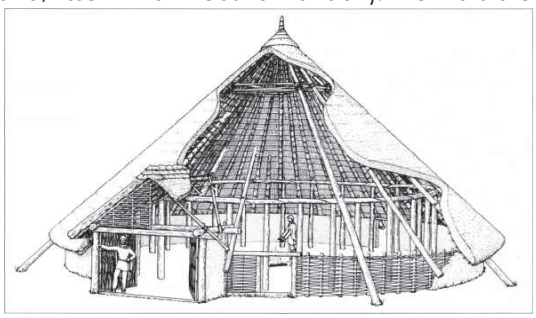

Fig. 1. Reconstruction of a British house from the Iron Age on a circle plan (roundhouse) – ground floor walls usually skeletal, covered with clay. (source: celticcultureblog.tk/warriors/info.html)

dr hab. inż. arch. Jan Kurek, prof. nadzw. PK, Cracow University of Technology

[1] https://encyklopedia.pwn.pl/haslo/drewniane-budownictwo;3894224.html

[2] Angus Fowler, a highly esteemed researcher in the domain of wooden architecture, believes that the oldest part of this church was built around 1060, possibly by making use of the components acquired from an earlier structure. See: A. Fowler, 2016. Wooden timber-framed churches in Western Europe. [In:] Drewno w architekturze I [Wood in architecture I], ed. J. Kurek, Krakow University of Technology, p. 75- 90.

[3] https://encyklopedia.pwn.pl/haslo/drewniane-budownictwo;3894224.html

Angus Fowler notes that the oldest preserved wooden churches have survived in Western Europe[4] (Fig. 4-5). In the Middle Ages, in this part of Europe, such structures were very popular, mainly as the frame constructions, even though, according to some source records from the 7th and 8th centuries, in Northern England and Ireland those were already being replaced with stone structures. Fowler argues that joinery and carpentry across the 14th and 15th c. England was by far the most advanced and decorative throughout Europe[5].

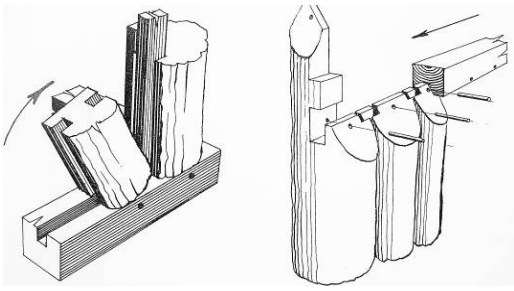

Fig. 2. Greenstead, (England - Essex), a church with wo fragments from 845 - joints of wall beams with a beam of foundations and a crowning beam [6]

Fig. 3. Greenstead (Anglia – Essex), church wall from 845 (source: Photo by Author, 1998)

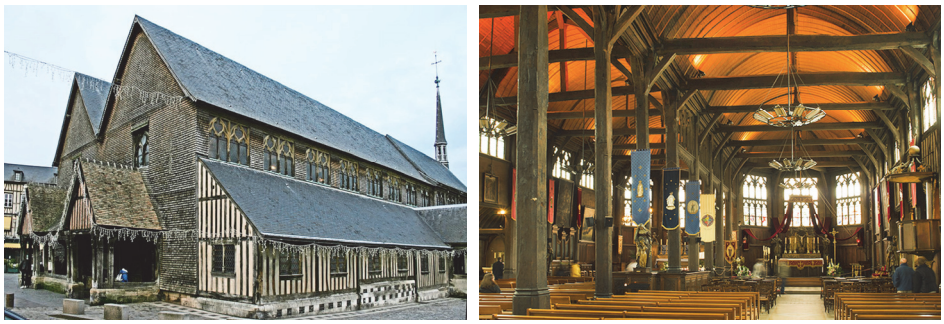

Fig. 4. Honfleur, wooden church of St. Katherine from the 15th century – a general view and the interior (source: http://mapio.net/pic/p-3785286/; www.calvados-tourisme.co.uk)

Fig. 5. Marton (England - Cheshire), church of St. Peter and Paul from 1343 – a general view and the interior. (source: studioworksphotography.co.uk/wedding-gallery-3; www.britainexpress.com/attractions.htm?attraction=4992)

[4] A. Fowler, *op.cit.*, p. 75-90.
[5] *Ibidem*.

In Central and Eastern Europe, wooden Christian and Orthodox churches came to be erected much later, usually distinguished by a massive coronary structure, commonly used in general construction, be that for defensive, housing or farming and produce storage purposes. At that time, numerous churches and chapels were built in Germany, while making use of a skeletal construction (timber frame), with the rectangular spaces between the timber beams making up the frame filled up with brickwork.

It is believed that about 1000 wooden churches were built across Norway. The oldest ones date back to the 12th c. Only 28 of them have survived to modern day, the rest having had successively been replaced with larger, timber-frame structures (of much simpler construction), or with much more durable masonry ones. Overall structure and shape of Scandinavian churches has evolved from much simpler forms and structures to more complex ones, also much richer in ornamental detail. Due to progressive expanding of the floorplan (footprint) itself, and increasing the actual height of the structure, a palisade quickly gave way to the skeletal structures, in which the centrally located posts – masts were surrounded with a skeleton of external walls filled-in with half-logs, and subsequently with wall planks, stiffened within the plane of the wall itself, and between the nave posts (apart from the crossed bars) with the plank "swords". These stiffening components consist of the planks with their sides coming up at the right angle, with a rounded off hypotenuse (Fig. 6-7). Some analogy may be spotted in the decorative wooden door portals, as encountered in the Polish Highlands (Fig. 8).

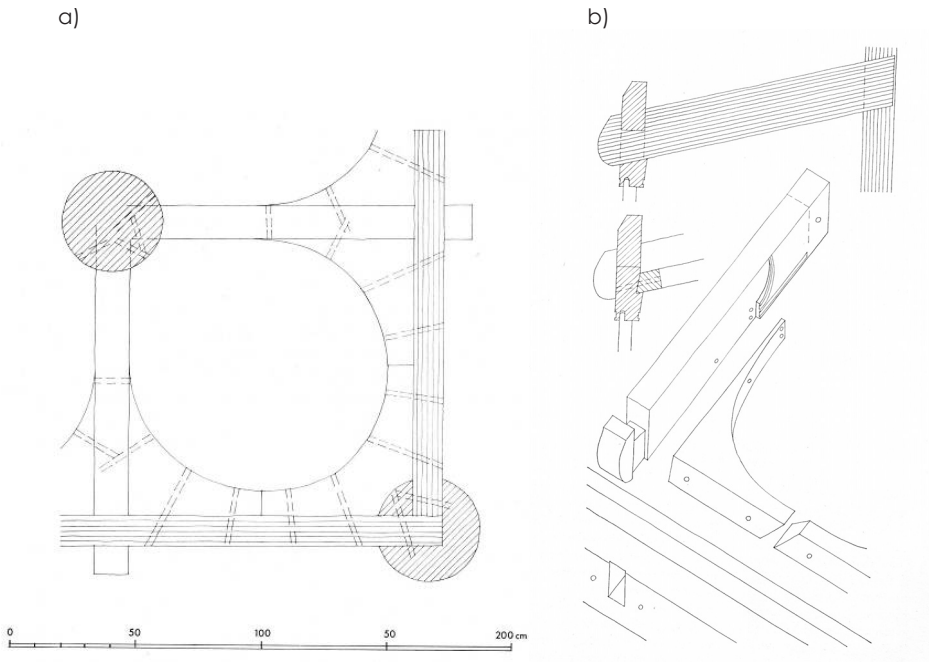

Fig. 6. Kaupanger, church from about 1180 - stiffening of the nave columns of the skeleton elements: a - horizontal projection, b - axonometry (source: [1])

This type of construction dominates in the medieval Norwegian pillar (mast) churches, called *stav*. Norwegian wooden churches are deemed to be the equivalents of the concepts of spatial planning applied throughout the early medieval Christian stone temples. The same holds true for the wooden churches in other countries (e.g. in Poland). It is believed that the archetypes of Scandinavian structures originate from the Anglo-Saxon and Irish architecture, and only the actual shapes of their roofs draw from a local tradition. The symbolic ornamentation in Norwegian wooden churches stems from Nordic pagan traditions, apparently giving grounds to the belief that Christianity may well have been introduced to Scandinavia earlier on than it is commonly acknowledged.

Fig. 7. Borgund, church from around 1150 - stiffening nave columns (source: Photo by Author, 1998)

a) b)

Fig. 8. Chochołów (Poland), the construction of wooden portals in the highland huts (source: Photo by Author, 2016)

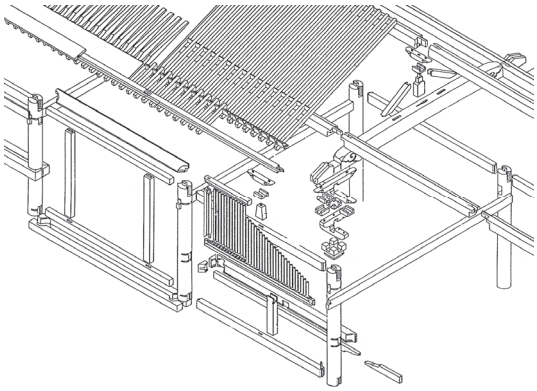

Fig. 9. Typical set of components in the construction of a Japanese house (source: [10])

The basic principles of construction in the still-preserved *stav* churches reveal a number of common characteristics. They share a post-frame type of the load bearing structure, as well as the structure of external walls, as frequently encountered in the oldest buildings, made of vertically arranged oak half-logs, stabilized by the horizontal ground and capping beams. Its origins are believed to go all the way back to the Saxon construction tradition. The structures of Norwegian churches differ from the ones prevalent in other parts of Europe, even though they do exhibit certain similarities to the skeletal structures encountered throughout China and Japan (Fig. 9-13).

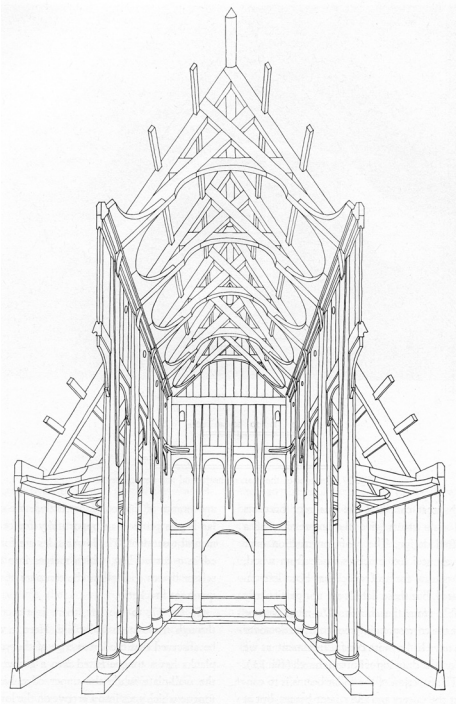

Fig. 10. Kaupanger – church, reconstruction drawing of the load-carrying structure (source: [10])

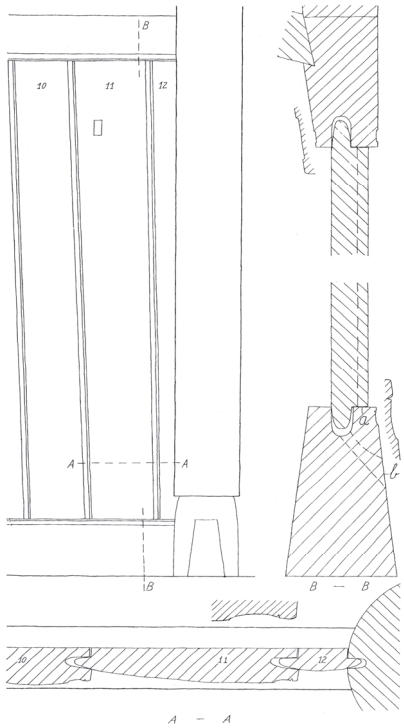

Fig. 11. Kaupanger – church from 1180, construction of the skeleton walls. (source: [10])

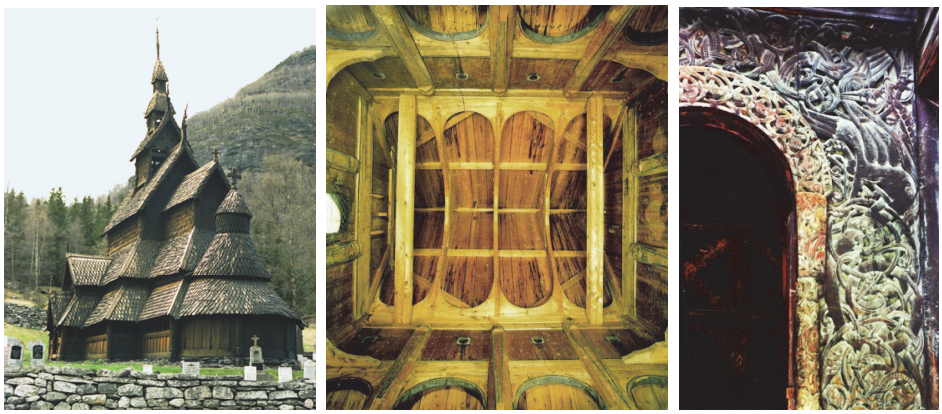

Fig. 12. Borgund – church from 1150: view, roof construction over the nave, door portal detail (source: Photo by Author, and [5] – central photo)

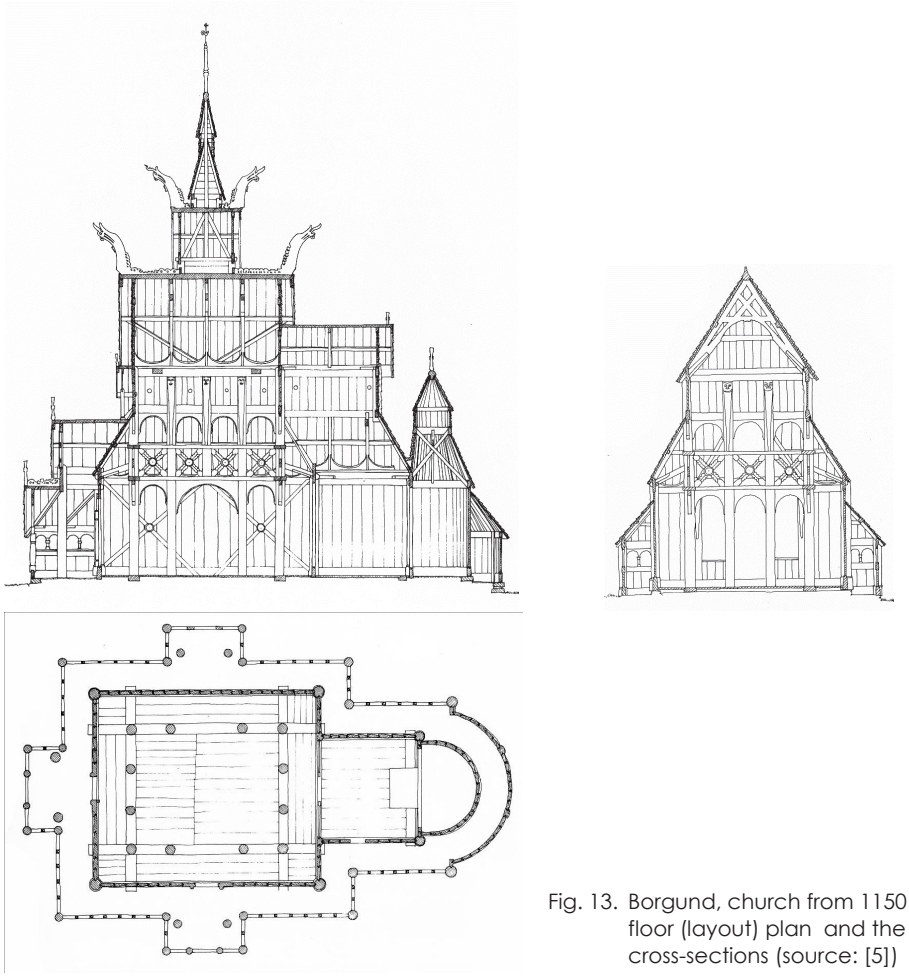

Fig. 13. Borgund, church from 1150 – floor (layout) plan and the cross-sections (source: [5])

Assessment of spatial structures and structural systems within a number of the oldest preserved Norwegian wooden churches, as well as the archaeological research regarding the foundations and relics of the non-preserved structures, made it possible to allocate them into the two basic groups:

- post-free – all under the same roof,
- post supported ones – with an elevated central section of the roof.

The first type – with a single nave – would apparently be derived from Norman stone temples.

A perfect example here would be the above referenced church in Greenstead. The other type is exemplified by the original (known through archaeological research) churches in Urnes and Lom. Further development – enlargement of the actual body of the structure itself combined with a multiplication of the number of posts inside it – resulted in the much individualised forms and structures within both types of construction. The post-free group of temples is presently exemplified by the churches in Holtålen, Undredal, Rollag or Reinli. A brand-new,

small group has also emerged, i.e. the one characterised by a single post positioned in the very middle of the nave (e.g. in Nore and Uvdal). Post churches (with a higher nave) are to be found in Urnes, Fortun, Lom, Borgund and Gol. A transitional type is believed to be the temple in Oye, as well as the original structure of the Vang church – with four posts within the nave, although without it having been elevated over the main roofing structure. By far the most original in its overall form, as well as authentic, is presently believed to be the church in Borgund dating back to 1150. On the other hand, the most valuable one – entered on the UNESCO World Heritage List – is deemed the church in Urnes, built around 1130 (incorporating some structural components from an earlier, 11th c. church), liberally decorated with runic inscriptions, biblical and floral motifs (Fig. 14).

Fig. 14. Church in Urnes (around 1130). On the top - northern view and a richly decorated wall construction post from the previous structure building; on the left - richly decorated wall and portal from the previous structure (source: Photo by Author, 1998)

Some of the most beautiful *stav* churches (e.g. in Borgund, Urnes or Vang – subsequently relocated to Karpacz, Poland) were built on the banks of scenic, yet pretty rugged, Norwegian fjords, overlooked by steep mountain slopes, from where the Viking longboats used to set sail for their plundering expeditions. They seem even more attractive to the eye today, as the rugged landscape effectively sets them off as true architectural gems, ambient relics of the times long bygone. This particular type of construction logic and form seems to be perfectly implemented in the medieval Scandinavian churches, which only goes to show that technology may indeed bring valuable contribution into the domain of architecture and the arts.

ABOUT THE AUTHOR

The Author is an architect, professor at the Krakow University of Technology, Institute of Building Design. Since 1989 his principal academic focus has rested on pursuing research and documenting historical monuments of wooden architecture, e.g. churches, belfries, and assorted relics of rural architectural origin. Also professionally involved in historic masonry structures, theory of architecture, and in general construction where the glued laminated wood components are used for structural purposes.

REFERENCES

[1] Bjerknes K., Lidén H.-E., 1975.The stave Churches of Kaupanger. Fabritius Forlag Oslo.
[2] Borgund stave-church, 1995. Society for the Preservation of Ancient Monuments Oslo.
[3] Bugge G., 1983. Stave churches in Norway. Dreyers Forlag Oslo.
[4] Christie H., 1979. Nes stavkirke – The stave church of Nes. Fabritius Forlaghus Oslo.
[5] Fowler A., 2016. Wooden timber-framed churches in Western Europe. [W:] Drewno w architekturze I, red. J. Kurek, Politechnika Krakowska, 75-90.
[6] Hewett C.A., 1980. English historic carpentry. Phillimore & Co. Ltd. London.
[7] Hyinden-Haug L.J., Stornesnb J.M., Architektura drewniana Norwegii, http://teatrnn.pl/leksykon/artykuly/architektura-drewniana-w-norwegii-wybrane-zagadnienia/
[8] Jensenius J.H., 2000. Research in medieval, Norwegien wooden Churches, relevance of available sources. Nord. J. Archit. Res. 13(4), 7-23.
[9] Lange T.W., 2015. Stavkirker – norweskie kościoły słupowe. Muzeum Narodowe w Gdańsku.
[10] Larsen K.E., 1994. Architectural Preservation in Japan. ICOMOS International Wood Committee/Tapir Publishers Trondheim.
[11] Lesley, Drewniane budownictwo sakralne w Europie, www.eduteka.pl/doc/drewniane-budownictwo-sakralne-w-europie
[12] Stavkirker. Normanns Kunstforlag Oslo.
[13] Urnes stave-church, 1997. Society for the Preservation of Ancient Monuments Oslo.

STAV CHURCH – WOODEN NORWEGIAN CHURCHES – PRINCIPLES OF CONSTRUCTION

SUMMARY. Norwegian wooden churches are analogous to the forms and ideas of functional-spatial formation modeled on early medieval Christian churches. As thought Lorenz Dietrichson, "it is a wonderful translation of a Romanesque stone basilica into wood." It is believed that their originals are derived from Anglo-Saxon and Irish architecture, and only the form of roofs has local roots.

Some researcher believes that Catholic temples were built in places which originally had local cult functions – called *hof*. These were buildings on a square projection (nave) with a roof supported on four columns. Other researchers derive them from the construction and forms of large rural buildings. However, these are only speculations and lack of evidence direct continuation of location and primary structures. The symbolic ornamentation of wooden Norwegian churches relies on Nordic paganism, also appearing to indicate the earlier introduction of Christianity to Scandinavia.

The basic principles of tectonics of forms and structures of still preserved Stavkirk churches show many common features. The principle of pillar-frame support structure is common in the oldest structures the exterior wall construction of vertically oriented oak logs, stabilized by horizontal ground beams and crowning beams - pendants. This kind of structure is equivalent in the fragment of the wall of Europe's oldest wooden church in Greensted, England (Essex) from about 845 years. Its origins are traced back to the Saxon traditional construction. The structures of the Norwegian churches differ from the building systems prevalent in other parts of Europe. However, they reveal some similarities to the skeletal structures found in China and Japan.

Key words: wooden churches, stave type pillar structure